LIGHTING RACK BRACKET

LR-BRACKET

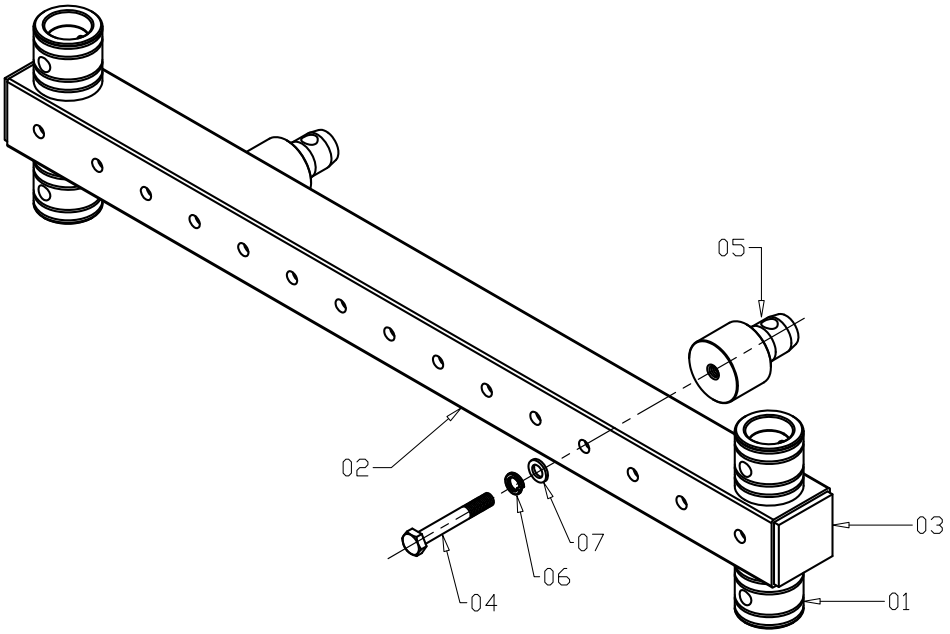

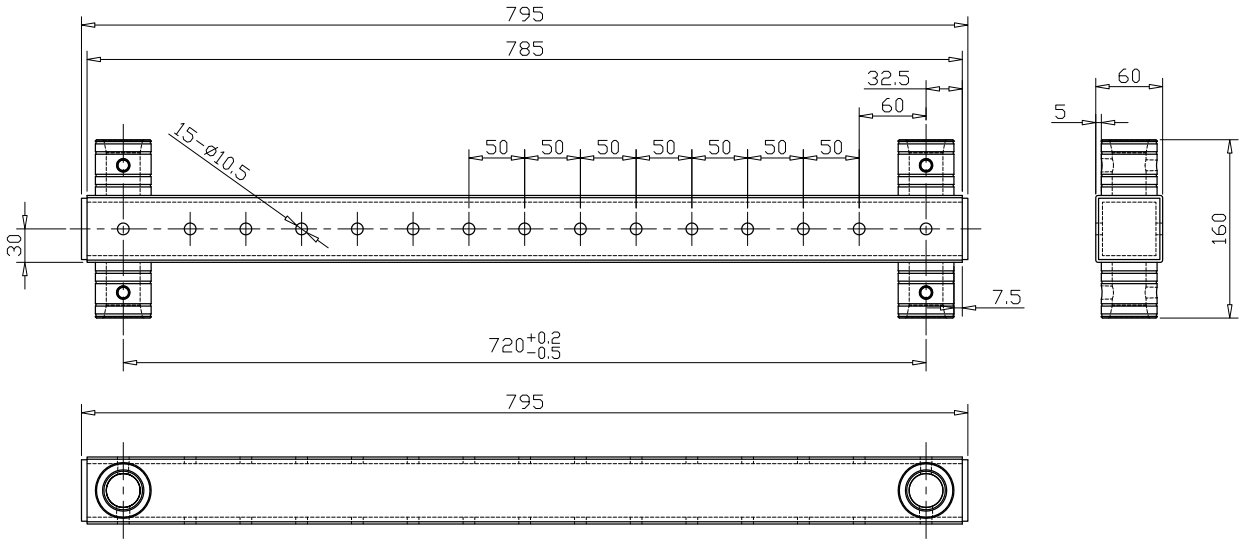

	DMS-01-1	steel	ZP	6
	DMS-01-4	S45C	ZP	6
	DMS-01-3	#2011	T6	2
07	ø20*ø10.2*2t	Q235	ZP	2
06	ø16.5*ø10.4*3t	Q235	ZP	2
05	PJT03C017	#6082	Black	2
04	M10*1.5P*80mm	12.9DIN	Black	2
03	50*50*5.0t	#6061	T6	2
02	60*60*6.0t*785mm	#6061	T6	1
01	ø50*50mm	#6082	T6	4
NO.	SPEC.	MATERIAL	FIN.	QTY.